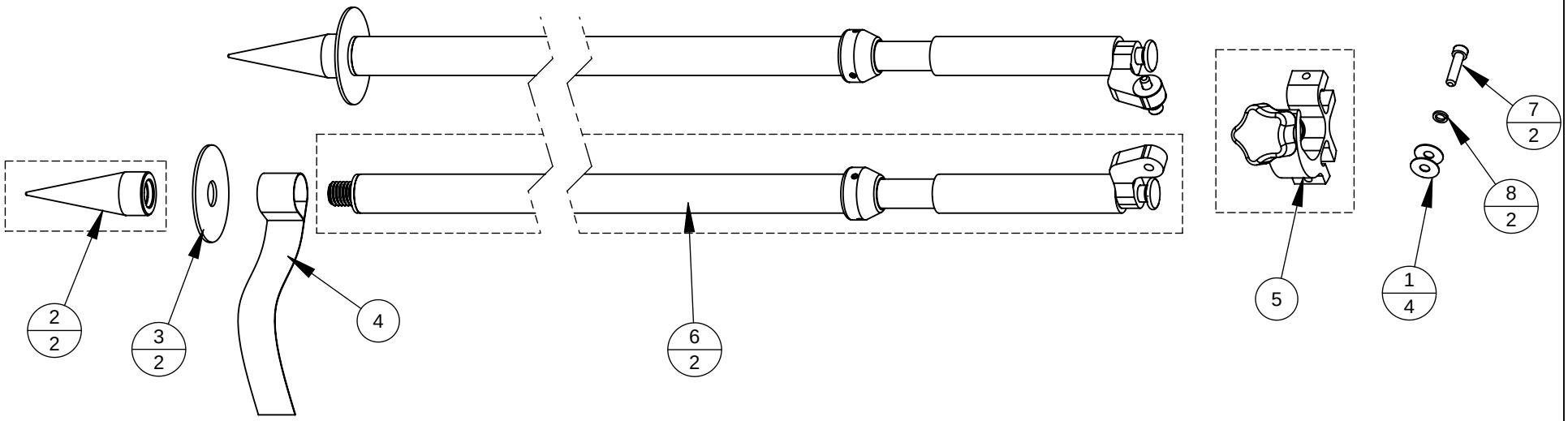

ITEM NO.	PartNo	DESCRIPTION	QTY
1	025TW	WASHER,NYLON,.265X.75X.025	4
2	5190-00	POINT,PRISM POLE	2
3	5210-012	PLATE,FOOT	2
4	5210-019	STRAP,LEG	1
5	5217-067	HEAD ASSY,BIPOD,OC,1/2-13 X 1.125"	1
6	5219-03-052	LEG ASSY,COMPLETE,5219-03	2
7	6X25MMSH	SCREW,SOCKET CAP,M6 X25LONG	2
8	D10713	WASHER,LOCK,M6,.240X.390X.062	2

***NOTE**
Components may be sold separately.
Please see sub-assembly part number drawing for details.

5219-03	**BIPOD,CARBON FIBER,OPEN CLAMP**	X X ITEM# QTY	**DATE:** 3/27/2008 **REV.** B PAGE 1 OF 1

MANUFACTURING CO., INC.
4155 OASIS ROAD, REDDING, CA 96003